Tyre - again!

Reinforcing wires sticking out of the tread:

Week 10 of 2011 so hardly ancient, and only 18k:

Tube valve vanished, I expected it to have shredded the tube but only a cut. I've carried a spare tube ever since I've had wire wheels so had one to hand for the new tyres. One spoke completely missing, probably broke beforehand and escaped when the bead came off the rim.

Tyre!

A slight bulge when looking in the arch ...

... turns out to be much worse with the wheel off ...

... with canvas showing and a split ...

... and even some of the steel belting showing and having parted.

Makes your blood run cold.

Wheel Nuts

Rostyle at the top, V8 (alloy wheels) below:

A simplified drawing (not to scale) of how the taper on the Rostyle nut locates in a taper in the wheel to centralise the wheel holes over the studs:

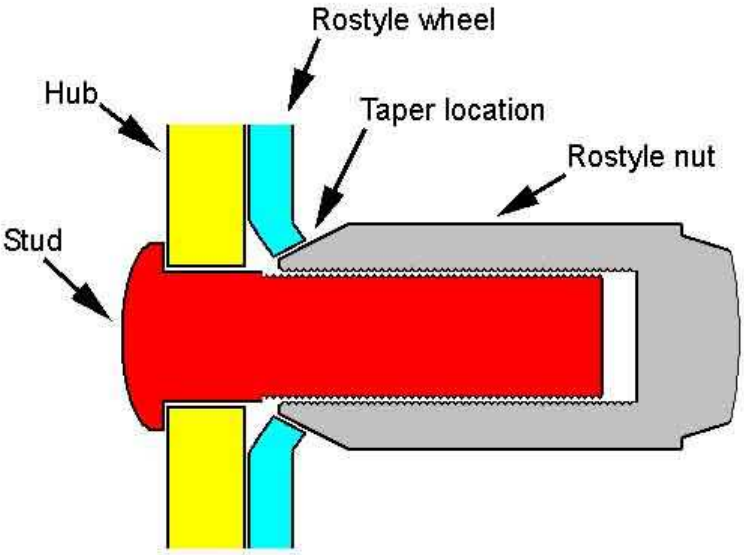

V8 nut in alloy wheel, showing how the cylindrical nut in the cylindrical wheel hole leaves a clearance which allows for a range of lateral positioning:

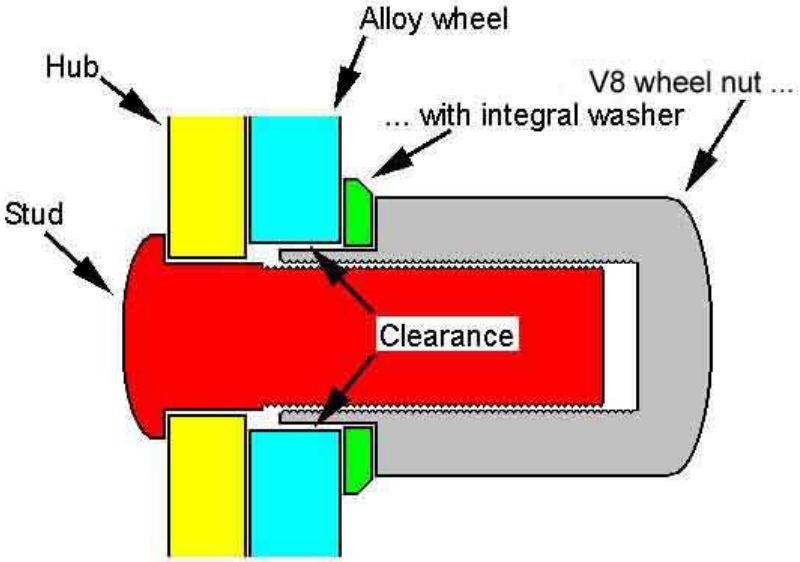

Whereas lightly fitting a pair of Rostyle nuts on opposite studs centralises the wheel on the studs, then a pair of V8 nuts are fitted to the other two studs to hold the wheel. The Rostyles are removed, the second pair of V8 nuts fitted, and all four tightened:

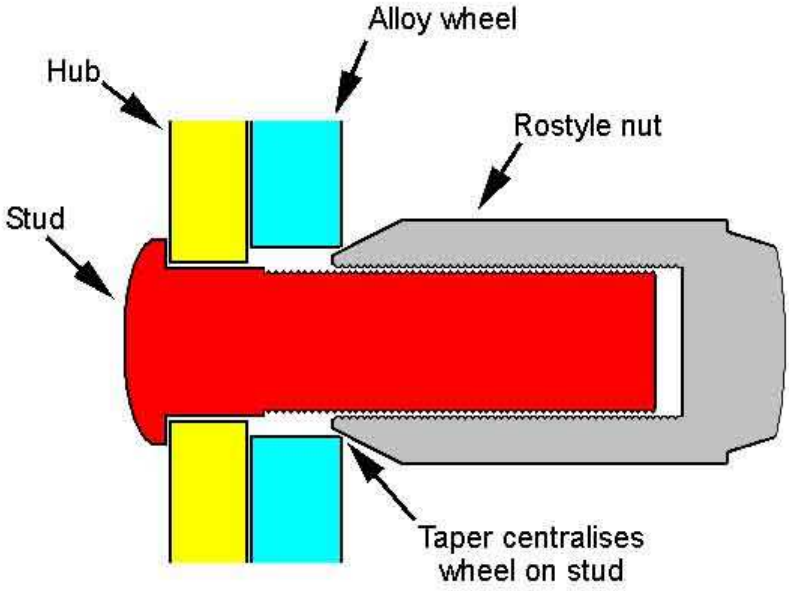

Showing a strip of mild steel wrapped round the Rostyle nut and tack-welded to make it the same size as the V8 nut:

Centre-lock Wheel Balancing

Showing the correct points to locate the wheel:

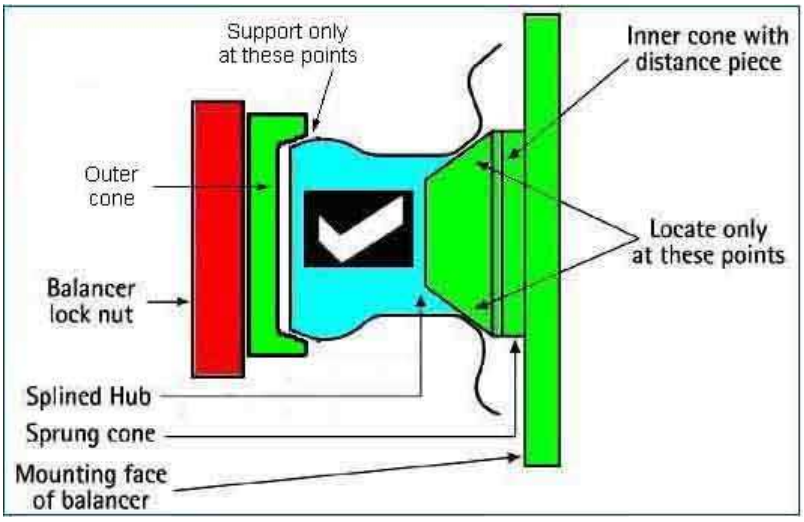

Outer face not supported:

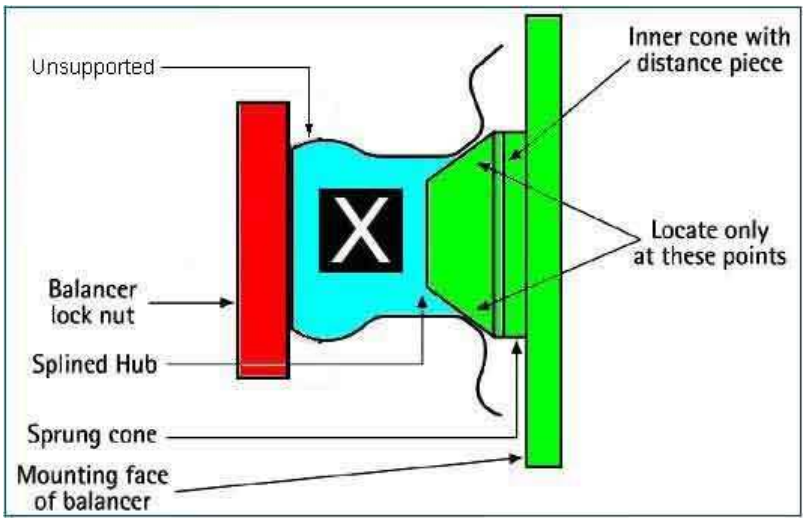

Incorrectly located on the outer face of the hub:

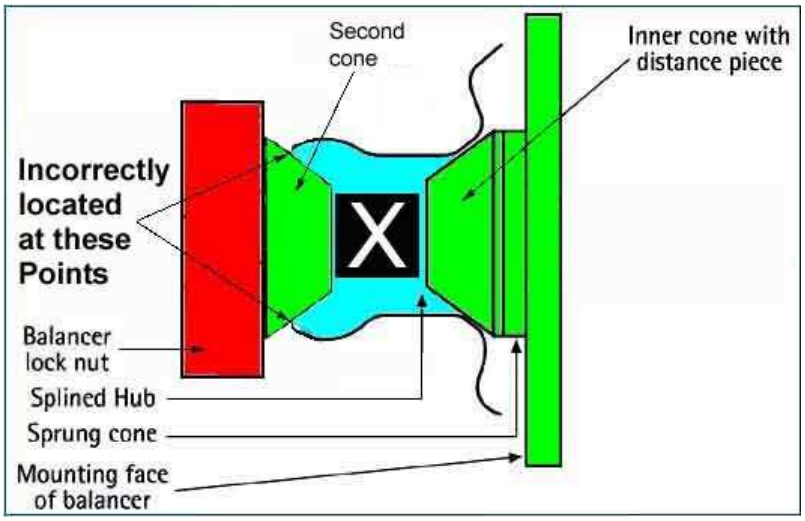

Balancing cones, outer on the left, inner on the right:

Spinners/Nuts

One of my 32 year-old spinners:

My preferred implement - a Thor aluminium/super-plastic No.2, the plastic end a bit mushroomed after 30 years (replacement faces are available) but still plenty of life left in it and no damage at all to the spinners:

Wooden 'spinner spanner' for eared spinners. Gentle on the chrome of the spinner, you may be able to wrench them loose by hand but other than that hitting the arms with a hammer puts it close to bodywork unless you position it vertically and hit the lower arm, which is awkward: (*Moss Europe*)

Metal 'implement' for eared spinners - likely to mark the chrome and taking up quite a bit of space in the boot: (*Moss Europe*)

Octagonal nut: (*MiniMania*)

Metal 'implement' for octagonal nuts also likely to mark the chrome: (*BMC Parts*)

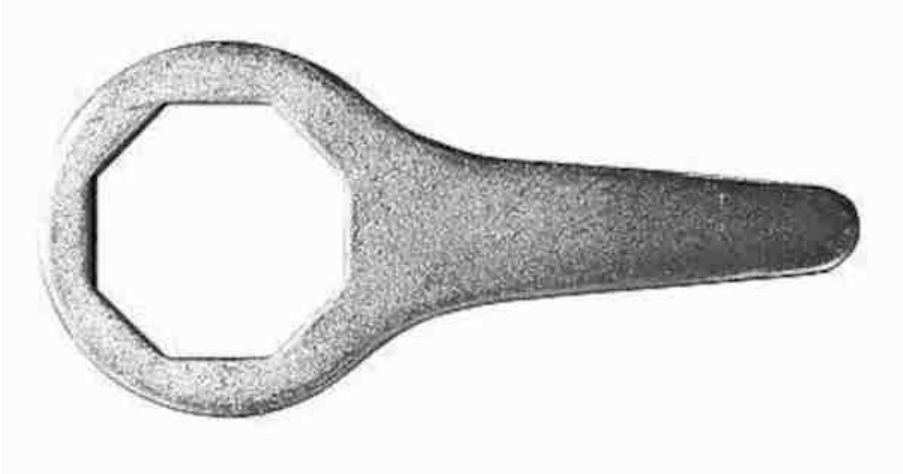

Heavy-duty version ditto even though they are unlikely to need hammering, again takes up quite a bit of space in the boot: (*Moss Europe*)


SUNBEAM
THE BRITISH WHEEL WRENCH

Centre-lock Wheels

Main components:

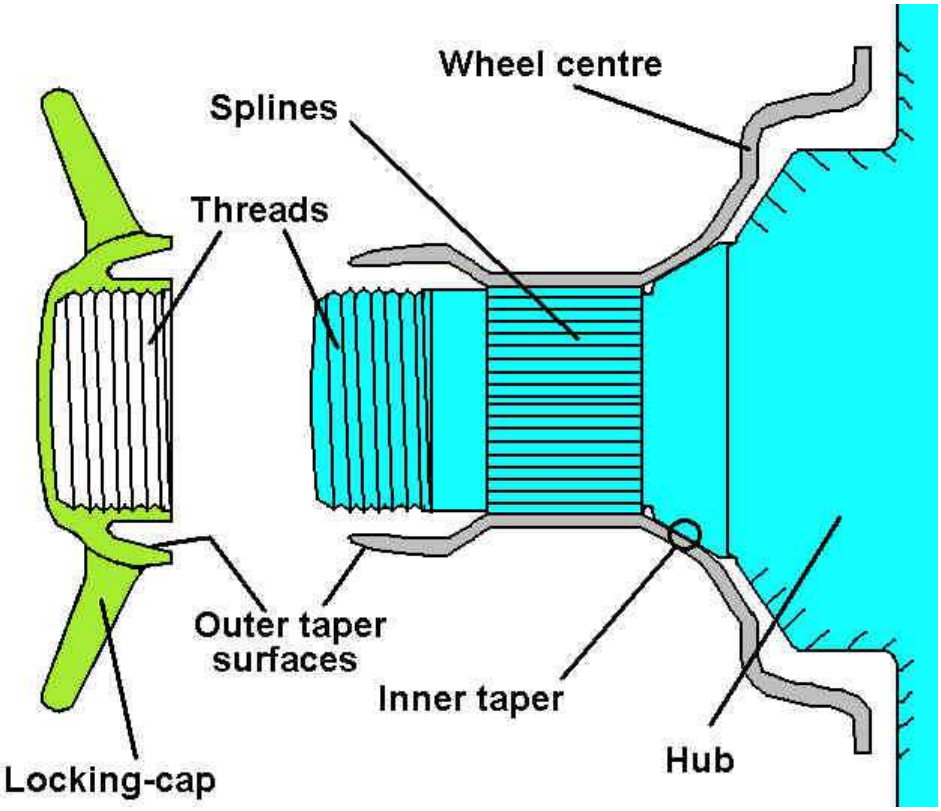

The above was taken from another site probably for much older MGs and doesn't represent the shape of the hub on MGB wheels, which are more like the Dayton Wire Wheel drawing adapted here to show points for measuring inset:

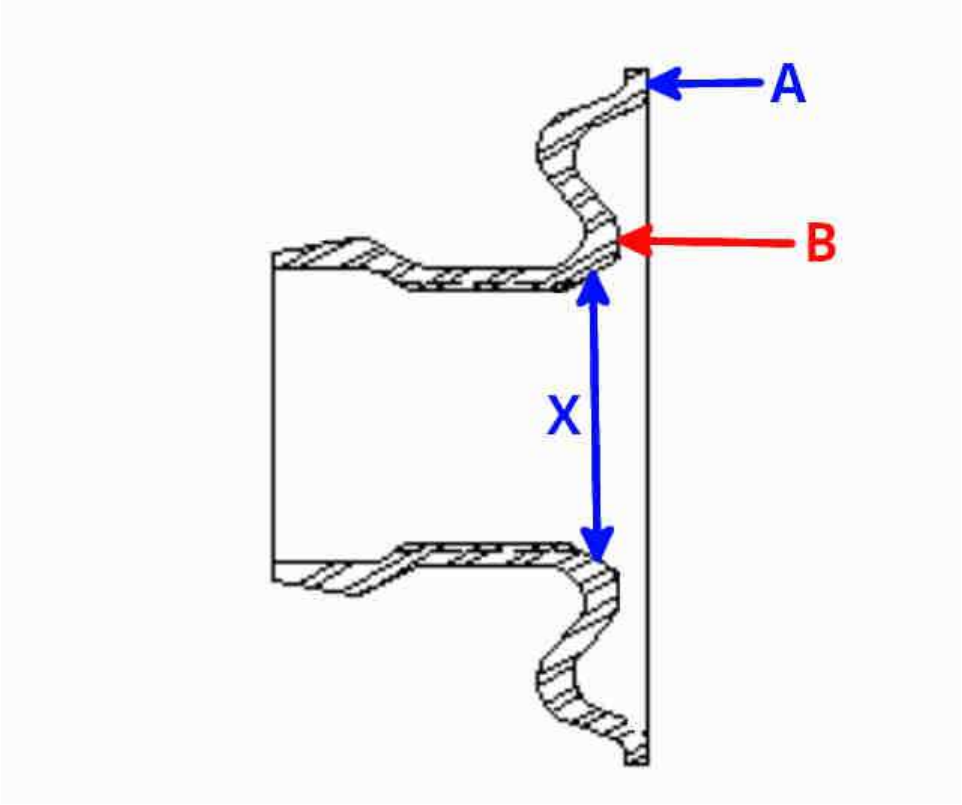

The Dayton document also has information on taper angles, runout measurement points and spline wear.

Wire-wheel Rear Hubs

Someone (name withheld to save him from embarrassment) posted pictures of his wire wheel hubs asking why one side had nuts on studs and the other had low-profile bolts. That immediately said to me that he had a standard hub one side but a conversion hub the other, axle type unknown. Conversion hubs are machined to allow the wheel to sit as close as possible to the drum, in an attempt to reduce how much further wire-wheel tyres on a stud wheel axle stick out compared to stud wheel tyres. However only about 10mm is available, whereas the difference in the wheels is about an inch. In this picture you can see the nuts on studs on the left, and low profile bolts on the right. Also the distance between the angled wheel seat and the drum on the left is clearly more than that on the right. It's for this reason that low-profile bolts have to be used on conversions hubs, there simply isn't enough room between drum and hub for the much taller Nylocs and studs:

And this is the effect with the wheel fitted. Richard Tower shows his wire wheel with only 15 thou clearance to the drum when it was on conversion hubs on a stud-wheel axle, whereas mine on standard hubs have 11mm.

Tracking gauge pointers in the middle of the wheel mounting surfaces:

A spacing of 1320mm:

Tube-axle centre-lock hub with two split-pin access holes: (*Orson Equipment*)

Half shaft also with two split-pin holes:

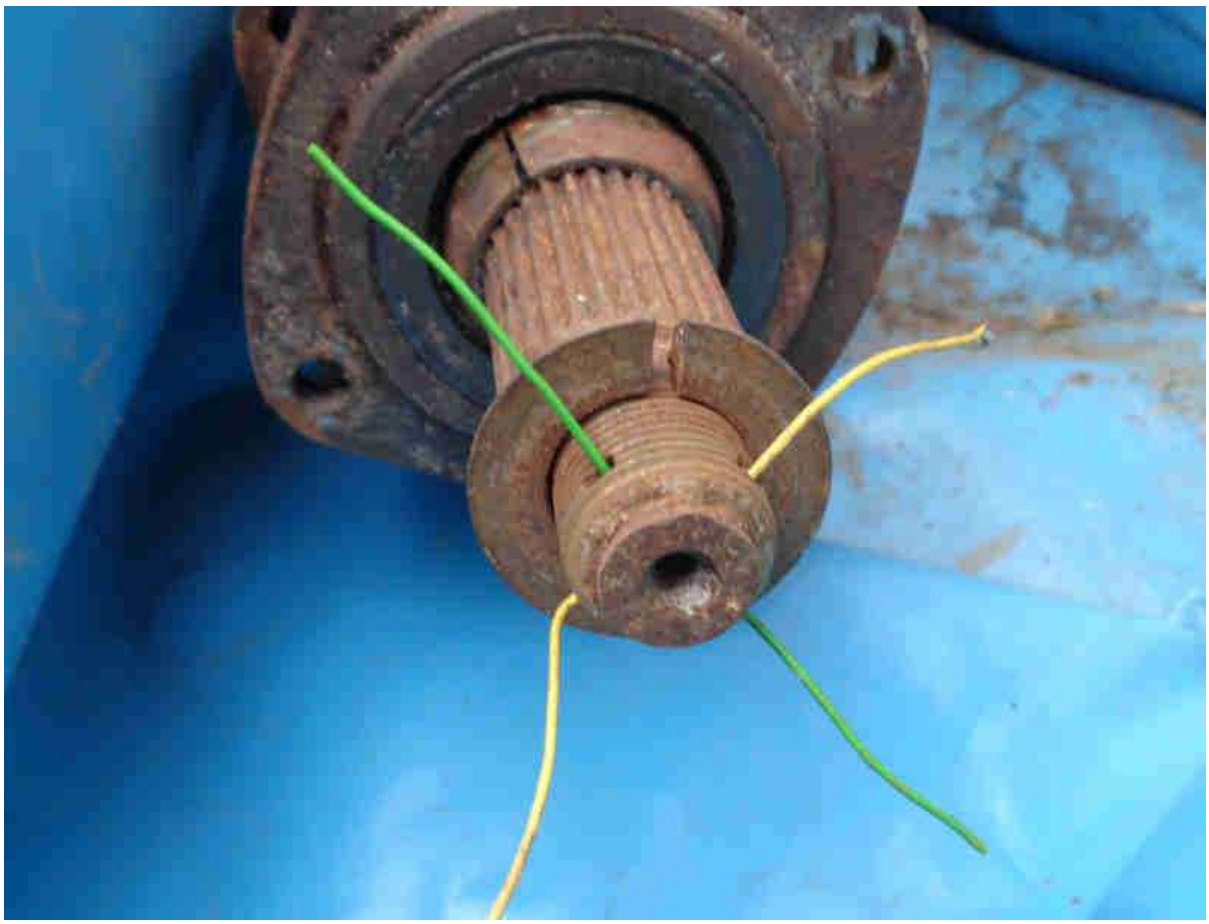

Rear Seal Replacement

New flange and seal, together with a wooden ring originally intended to be used to drift the new seal into position but not used

The seal fitted over the flange

The 'tool' used to hold the drive flange steady while the central nut was undone - a piece of 2 ½" angle iron, with a curved section cut out and 2 holes. The flange nut is 1 1/8" AF, same as the front hub nuts.

Prop-shaft removed

Flange removed

The 'ice pick', and the large socket that was used to drift the new seal into position

Spare Wheel Clamps

Showing the relative lengths of the clamps for each wheel: *(Rimmers)*

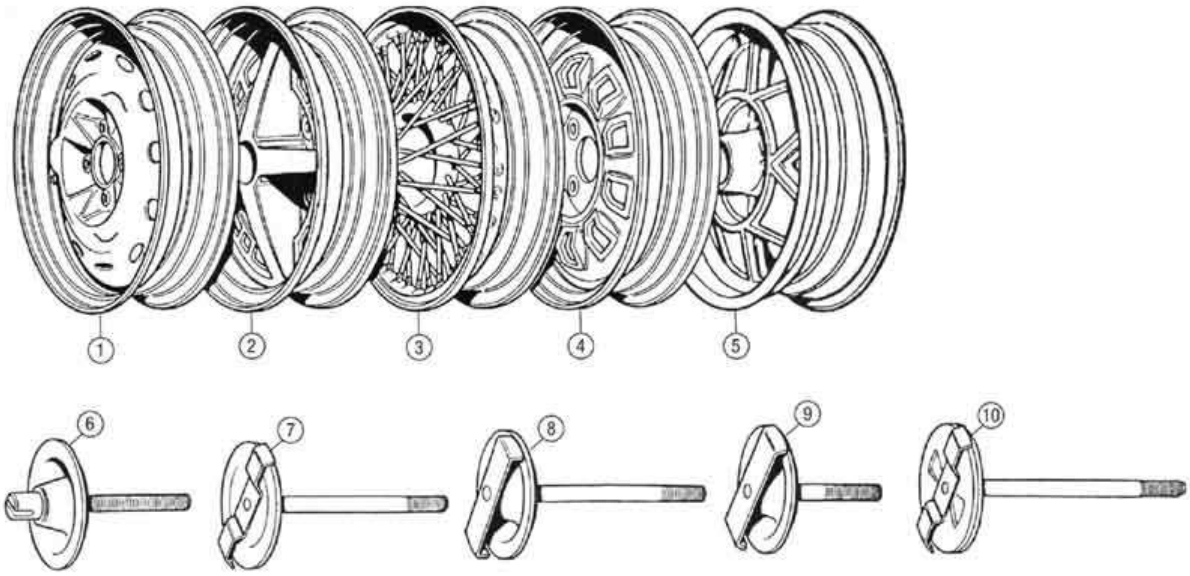

V8 wheel stores upside-down, using a short clamp, with up-turned 'ears' and not down-turned as drawn in item 9 above:

Making a handy extra storage space:

The Rostyle clamp length means that the wheel has to be stored outer face upwards, but it can also fit upside down without fouling the threaded boss in the boot floor:

The V8 clamp is a perfect fit for that as well:

Wire-wheel clamp fabricated from an old Ron Hopkinson rear ARB drop-link, a 3/8" UNF threaded section welded to one end of that, and a clamp-plate with 'wings' and plastic protector fitted to the other end:

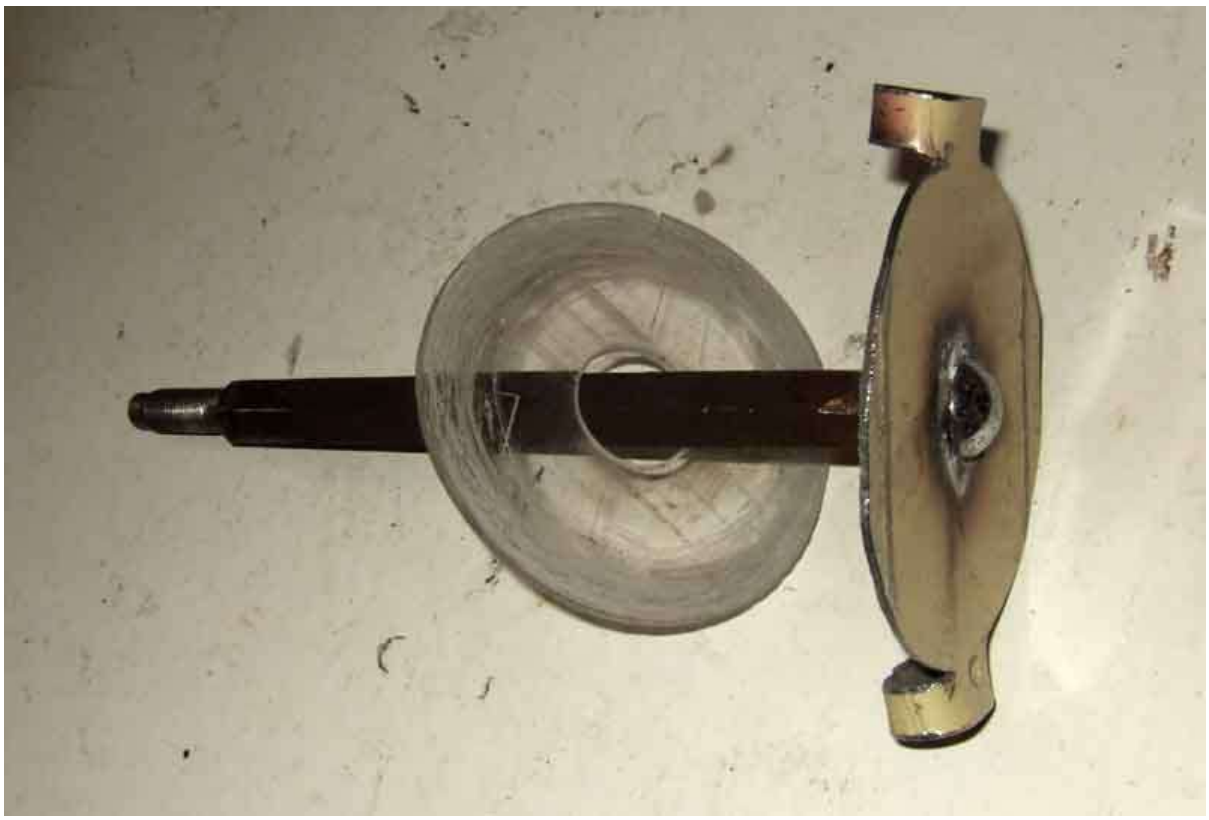

Smooth top surface avoids damage to the cover carpet:

V8 Wheels Refurb

Deep in the recesses of the chrome rim there were areas of black that seemed to resist elbow-grease and Solvol Autosol, a so-called chrome cleaner that I would never normally use on chrome as I consider it too abrasive - I keep it for the alloy parts. It even resisted a wet Scotchbrite pad (although heavy use of a wet pad will eventually wear away the chrome, use of a dry pad results in visible scratches almost immediately). So I took a small screwdriver to a patch and scratched away at it fairly gently to see what happened. Amazingly it came away, and with a wet Scotchbrite used after the screwdriver left a tiny pimple in the chrome in place of what had been an area of black perhaps 1/2" by 1/4". So that became the first step in the process, to be followed by a session with Solvol Autosol and a great improvement in all the rims.

Next came removing the existing black paint. A 'pencil' wire brush in a drill proved very effective. Even though quite a lot of the paint remained most of it had very poor adhesion around the cut-outs in the outer part, although it was a bit harder work in the central section. I completely stripped the front but just the areas round the cut-outs on the back. A short-cut I know, but since the end-result was hardly going to be pristine it didn't warrant the extra effort to completely strip the rear as well.

What paint to use? Although the spare (which I have only ever used once for a puncture as about 1/3rd of the chrome in one large area has peeled off and been painted silver) looks like it has been repainted in gloss, that on the wheels on the car looks like satin, and I think the satin is preferable. I had previously used Hammerite Special Metals primer (brushing) and silver (aerosol spray) on the Toyota Celica wheels with good results so opted for the same again but in satin black. The problem is all those cut-outs in the alloy with polished facets, and the polished ring round the nuts. I tried masking off the central ring but it proved impossible, let alone the cut-outs. Laying masking tape past the edge then shaving it off with a sharp blade may work but I didn't think of that at the time. I had seen liquid masking tape in Halfords so thought that worth a try, but wouldn't you know they had sold out and didn't know when they were getting more in. As I was on a tight timescale there was nothing else for it but to go for brushing top-coat as well as undercoat and no masking - what was I thinking of!

The primer is very easy to apply, being thin but with good coverage, and able to be top-coated within a couple of hours. I used a 1/4" flat brush (last used for painting Airfix kits with my son) and it didn't take too long. I made sure I painted right up to the edges which meant that there were some streaks onto the polished facets, but I immediately wiped along each facet with a thumb or finger which left a nice sharp edge.

The top coat was a different matter - it is quite thick anyway, has to be applied thickly or the coverage is poor and the red primer shows through badly, it needs two coats anyway, and they must be applied at least two hours apart but within seven hours of each other. This was very time consuming with the 1/4" brush and a 1/2" proved better for the larger areas with the 1/4" being reserved for the groove between the cut-outs and the ring and the inner faces of the cut-outs. One thing I was concerned about was brush-marks in the paint, but even though it has a thick consistency it flows very well and all the brush marks vanished. The can warns against too-thick application causing sagging and runs, but I didn't get any. For the back of the wheel round the cut-outs a spray version of the same paint was OK as there was no masking required, and this saved some time. While waiting for each coat to dry I cleaned up the (previously removed) hub centres with Solvol Autosol and the wheel nuts with a wet Scotchbrite pad to remove the rust staining on the chrome and Solvol Autosol to polish. The MG logo came out of one of the centres while removing it from the wheel with a mallet, Araldite has proved very good for sticking them back on.

The results are really quite good (this was a refurb, not a restoration) and well worth the eight hours or so of effort per wheel it took. They still don't bear close examination of the chrome or nuts, but they are a lot better than before. Some of the nuts are hardly marked whereas others have lost quite a bit of chrome and the substrate has rusted. I did consider replacing the nuts with stainless now, but at £74 for sixteen that can wait for the new wheels.

September 2017 and they get another much needed 'clean'. The black centres were still sound after the previous refurb, the facets came up well with Solvol Autosol similarly the chrome centres, but the chrome rims needed a lot of work with a pan-scourer and Solvol Autosol, and even a blunt flat-blade screwdriver to get the worst of the crustiness off from round pin-holes in the chrome that had allowed corrosion to leach out. I'd already replaced the nuts with stainless in 2010, although half of them started rusting and turned out to be magnetic i.e. ferrous steel! Some argument with the supplier got them replaced - eventually.

Stainless Steel V8 Wheel Nuts

The peeling (arrowed) nut and the worst washer - clearly not stainless.

Stud Wheel Offset and Backspacing, and Wire Wheel Inset/Outset and Backspacing

Comparison of my wire (aftermarket Dunlop India) and early Rostyle wheels. The drum faces are 19mm apart which is half the stated 1.5" difference in width between the two Salisbury axles. 28mm is the stated offset for the earlier 5J Rostyles I have i.e. the distance between the centre of the wheel and the rear of the hub/drum face. As measured on my Dunlop wire wheels there is 11mm between the rear of the hub face and the drum, and the centre of the wheel is 1mm inboard of that, giving an inset of 12mm. The Workshop Manual gives an identical track for both the roadster 4J disc (5J on the GT) and the 4.5J wire (roadster and GT) wheels, meaning that the different axle length was exactly balanced by the different offsets of the two wheels, and the centres of the wheels and tyres would be in the same place relative to each other. For the track to be the same for wires and Rostyles the centre of the wheel 'C' would have to be in the same place. But my rear track with wires is 20mm more than Rostyles or V8 alloys, indicating my wire wheels have 10mm less inset than the originals, implying the originals had 22mm inset, and the later ones with increased clearance to the arches would have even more. SC Parts have wire wheels for the MGB with 14, 19 and 22mm insets which is quite a range. Even though the wire wheel is a 4.5J compared to the 5J of the Rostyle the outer face of my wire wheels and hence the tyres are closer to the arch than with Rostyles, 10mm closer even than the wider tyres on the V8. That probably explains why I still have some rubbing with 175 tyres whereas people with original wheels say they do not.

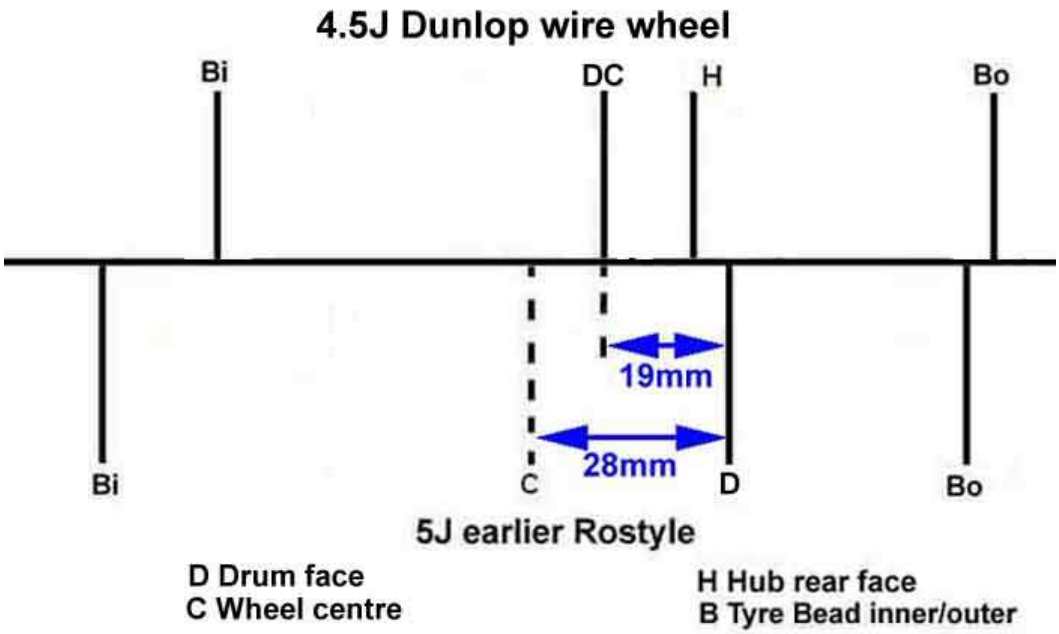

Wheel and tyre width is irrelevant to track as that is measured from the centre of each tyre/wheel. The factory figures for front track are the same as the rear for wire wheels, but 1/4" less for disc wheels, indicating that the different hubs did not quite balance out the offset. If choosing wider wheels you would have to go for more offset to maintain the clearance to the outer arch on a chrome bumper car, while still giving adequate clearance to the inner part of the wheel well, which would have the side-effect of reducing the track. There should not be a problem with rubbing the outer arch on rubber bumper cars as the arch should ride up over the tyre on the inside wheel, which is the one that moves out on a corner.

Showing the protrusion of the 'hub cap' mounting face of the earlier narrow-track wheel. This makes the wheel 'wobble' when that side is laid down on a flat surface with the hub-cap removed. The later wide-track wheel with less offset lies flat with no wobble.

Stud Wheel Offset and Backspacing:
Positive, zero and negative offsets. Positive offset is the usual arrangement - for steel and alloy wheels at least and puts the centre of the wheel inboard of the brake drum mounting face, to bring the angle of the kin-pin and the centre-line of the tyre together at the road surface. Negative offset is often used on show cars to bring the wheels out, but it causes them to move back and fore as the wheel is turned instead of pivoting and can adversely affect handling. Image from Crankshaft Coalition.

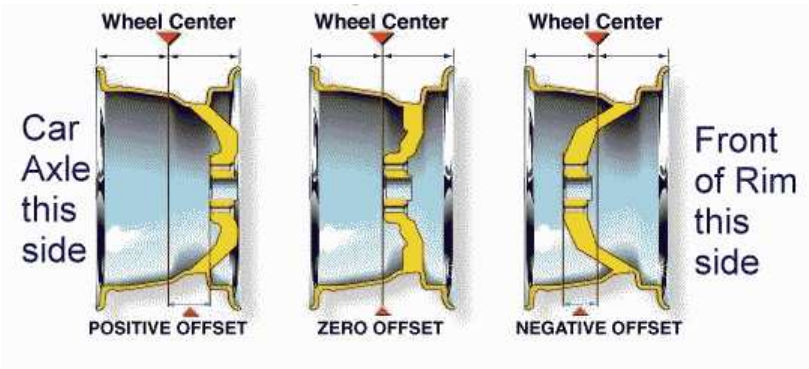

Offset and other wheel dimensions, from The MG Experience

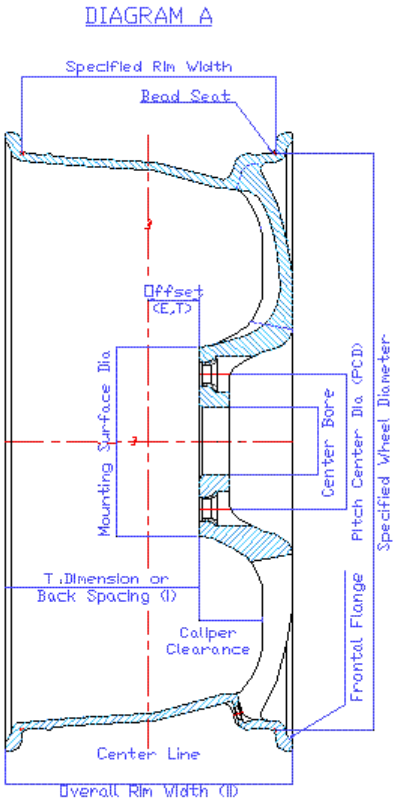

Stud wheel backspacing is the distance between the inner rim of the wheel and the mounting face to the hub, as shown here, taken from this site

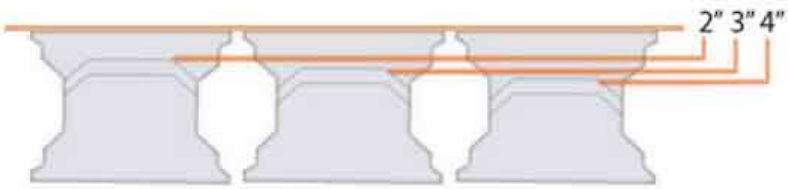

This means there is a mathematical relationship between wheel width, offset and backspace, and it is much easier to measure backspacing and use the stated wheel width to calculate the offset, than measure the offset directly from some notional centre-point of the wheel. For positive offset wheels as on the MGB, take the backspace, subtract half the wheel width, and you have offset.

Well, I say easier, but it is not quite so simple as that. Backspace is measured from the outer edge of the rim so the wheel width has to be measured in the same way, you can't use the stated wheel width is that is from the outer edges of the tyre bead seat and is typically 1/2" or more less than the overall width.

Another complication if measuring existing wheels with tyres on. If you don't have a straight-edge that only sits on the rim and doesn't reach the tyre, you have to take into account the 'bulge' of the tyre past the rim. I laid a straight-edges across smooth parts of the tyre wall, and measured from there to the edge of the rim on each side to get two 'bulge' correction factors. Measured tyre bulge to tyre bulge and subtracted both correction factors to get an overall rim to rim width. Then I could do the original calculation for offset and got 28.5mm - close enough to the stated value of 28mm.

Wire Wheel Inset/Offset and Backspacing from MWS. Therefore inset on a wire wheel is the same as negative offset on a stud wheel, taken from the back of the hub, as is backspacing:

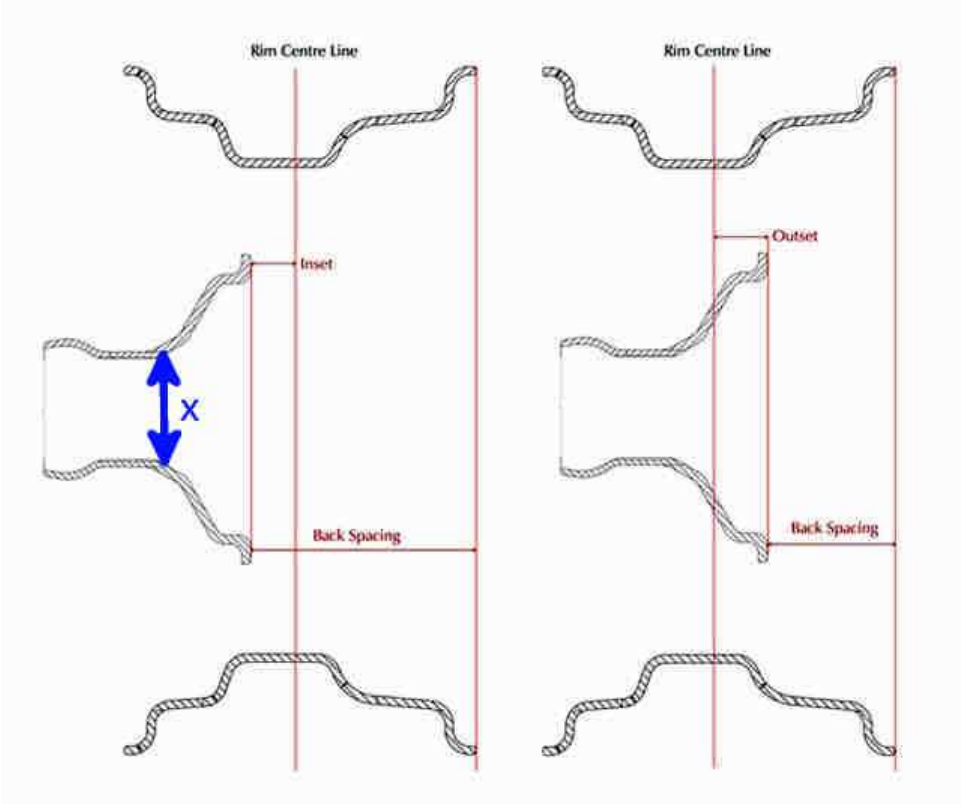

But that is a very simplistic drawing just showing what inset and outset are and the hub shape bears no relation to mine. The measurement points on the hub they show are miles away both radially and laterally from the mounting face 'X' and subject to any distortion where the spokes are. MGB hubs are 'folded back on themselves' as you move outwards from the mounting face and there is a much more logical place to take the measurement which is very close laterally and radially to the mounting face and away from the spokes:

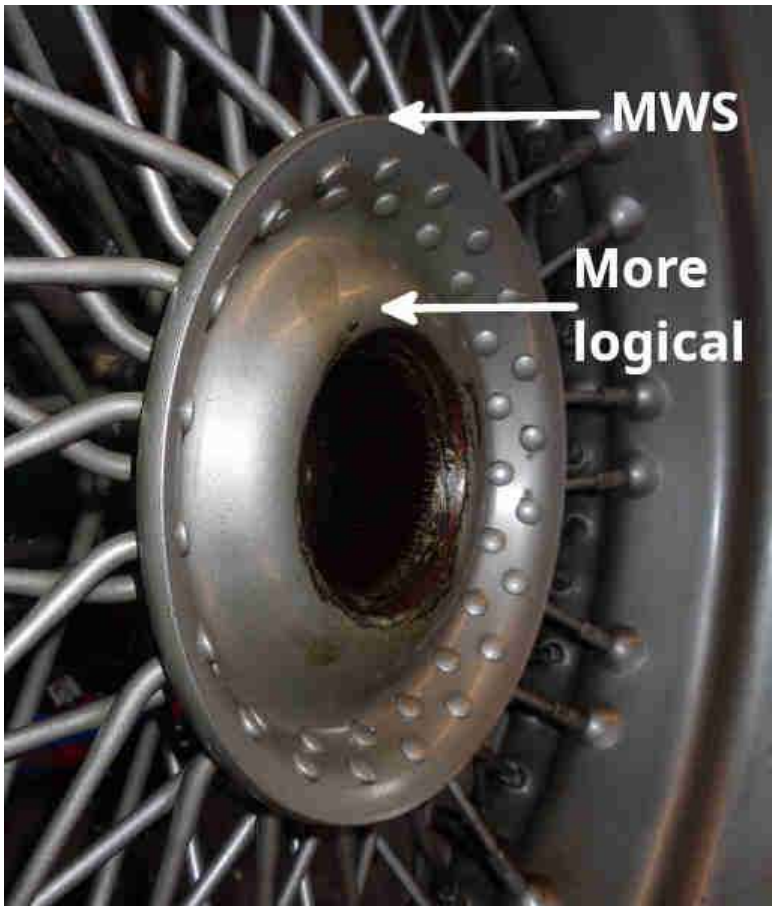

Diagramatically as here adapted from this Dayton Wire Wheel drawing showing the MWS point at 'A', the mounting face at 'X', and the more logical measurement point at 'B':

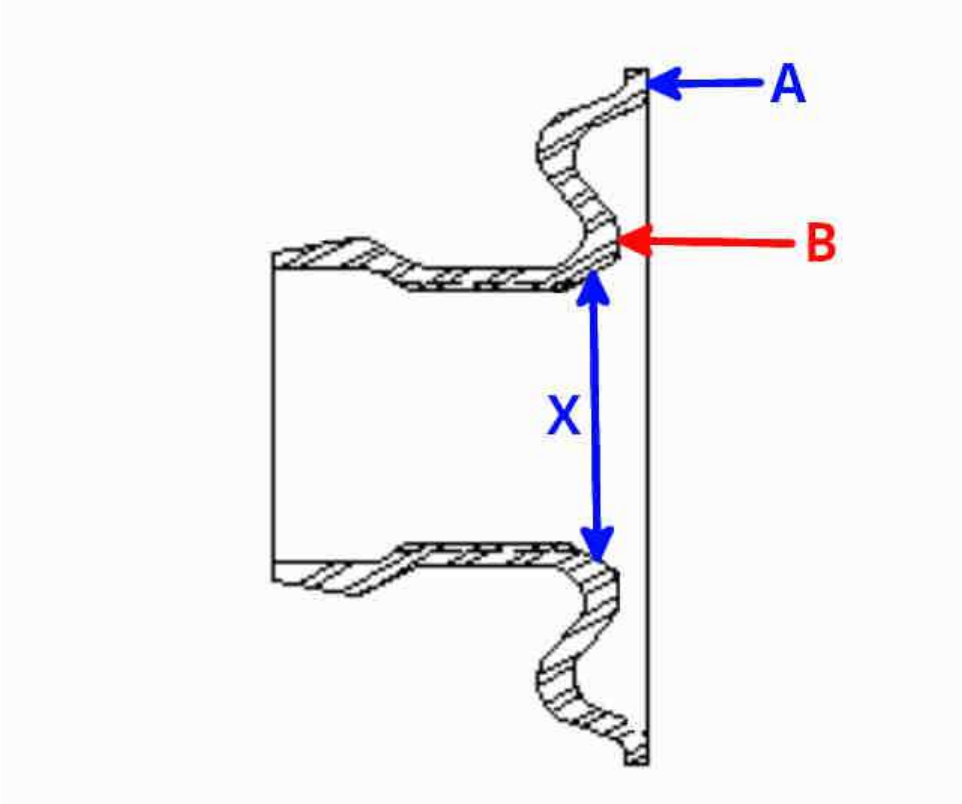

Three of Ryan Frederickson's wheels have these stampings and 'Made in England', the odd one out has nothing. '4.5Jx14' is the wheel width and diameter, but what about the '14.3'? Clausager says that in Sep 76 there was a new wheel that has 9/16" inset i.e. 14.3mm , but why give that dimension in mm when the others are in inches and they could have put '0.56'? Also that wheel gives less clearance then the unmarked wheel, when Clausager say the change was to give more.

Mike Bennett's 'original' (his quotes), indicating a 21mm offset?:

Really you need to take a wheel such as either of the ones above with the '21' and '14.3' stamping and see where that puts you from the centre of the rim in relation to the mounting face of the rim and the 'folded back' edge.

Chrome Wire Cleaning

Pretty good, after 20 years

Do I have tubes?

Tubeless valve on the left clearly with a 'mushroom' seal against the face of the rim. Tube valve on the right with straight sides going through the hole in the rim i.e. no seal.